LONG RANGE AUTOMOTIVE/LONG RANGE AMERICA

Product Information/Install Instructions for

Toyota 4Runner 3G (185 Series) 1997-2002 *Diesel/Petrol (w/charcoal can in engine bay)*

Kit P/N TSURF97A

CONTENTS **PAGE**

NOTE: This product is **NOT FOR SALE TO, OR USE BY, CALIFORNIA RESIDENTS**. This product has not been approved, certified, rated or otherwise passed upon by any Federal or State regulatory agency.

PRODUCT INFORMATION/INSTALL INSTRUCTIONS

Toyota 4Runner 3G (185 Series) 1997-2002 *Diesel/ Petrol (w/charcoal can in engine bay)*

Direct-fit extended range fuel tank to serve expedition, long-distance travel and hauling needs...buy fuel when the price is right and be prepared for the long haul. These tank kits from Long Range Automotive of Melbourne, Australia were developed to meet the needs of North American light truck and SUV owners. We provide additional fuel capacity from a high-quality aluminized steel auxiliary or replacement tank that integrates seamlessly with factory fuel systems and emission controls in North American vehicles. These tanks are built by specialists with three decades of experience, serving customers around the world.

Part Number	**TSURF97A**
Type	**Auxiliary**
Capacity –Gallons	**29**
Fill Point	**Dual**
Fuel	**Diesel/Petrol (some)**
Location	**Behind Rear Axle**
Relocate Spare	**YES (if under the vehicle)**
Exhaust	**Standard**

This tank **may** be installed by a general automotive shop or mechanically competent vehicle owner, given adequate tools, skills and the help of a friend. **We strongly recommend that, to avoid potential injury and property damage, the tank be installed by a trained professional.** Please call if you have pre-install questions (800-224-7801 x101 Ward Harris).

Long Range Automotive fuel tanks are imported by Long Range America, LLC
LongRangeAmerica.com
1-800-224-7801

I. BEFORE YOU BEGIN

A. INTRODUCTIONS

1. We at **Long Range Automotive** (LRA) and **Long Range America** (LRAM) appreciate your selection of a Long Range Automotive fuel system for your vehicle. Please read this entire Guide before beginning installation.
2. This Guide provides information necessary to install this LRA product in your vehicle. PLEASE NOTE: We strive to be detailed and accurate with this information...however, errors and omissions can occur. Changes to install instructions can occur without notice. These Guides are constant works in progress...we are constantly working to make them as user-friendly, detailed and accurate as possible, and we welcome install feedback notes, photos, comments and suggestions to make them so. If you see an error or omission, or need additional information not provided in this manual, please contact Long Range America at 800-224-7801, extension 101 (Ward Harris).
3. **This product is designed to suit vehicles as delivered when new. Modifications such as suspension, skid plates, bumpers, hitches and other aftermarket additions may impact or prevent installation.**

B. DO's AND DON'Ts

1. **DO: WE HIGHLY RECOMMEND ALL WORK TO BE COMPLETED BY A PROFESSIONAL INSTALLER.**
2. **DO:** Review these install instructions and plan your installation - tools, helpers and questions - ask ahead of time.
3. **DO:** Call 800-224-7801 ext. 101 (Ward Harris) with any questions - he will get you the right answer from the right source.
4. **DO:** Use **fuel rated thread sealer** or Teflon tape on all fittings.
5. **DO:** Keep all fuel lines away from the exhaust system and any sharp edges.
6. **DO:** Use Long Range Automotive fuel systems and parts in conjunction with original manufacturer's equipment or other Long Range Automotive systems and components.
7. **DON'T:** DO NOT have any open flames or heat sources in the installation area.
8. **DON'T:** DO NOT CUT any of the existing fuel pipes while in the vehicle or while attached to the fuel tank.
9. **DON'T:** DO NOT USE Long Range Automotive fuel systems and components with other aftermarket fuel systems. This type of use can result in malfunction and will void the Limited Warranty.

C. SAFETY PREPARATIONS

1. **BEFORE BEGINNING INSTALLATION, TURN OFF THE KEY AND DISCONNECT THE VEHICLE BATTERY.**
2. **ALWAYS WEAR THE PROPER SAFETY EQUIPMENT (SAFETY GLASSES, HEARING PROTECTION, GLOVES, ETC. AS APPROPRIATE).**
3. **BE SURE TO KEEP HEAT, SPARKS AND OPEN FLAME AWAY FROM THE INSTALLATION AREA.**

D. INSTALLATION KIT CONTENTS

HARDWARE	HOSES & CLAMPS	MISC PARTS
2 x M10 x 85mm Bolt	1 x 6mm Hose @ 55" long	1 x Twin Filler p/n TSURFA
4 x M10 x 25mm Flat Washer	1 x 8mm Hose @ 47.25" long	1 x 12mm Y Piece
2 x M10 Nyloc Nut	1 x 12mm Hose @ 25.6" long	1 x Fuel Transfer Pump
5 x M5 x 10mm Pan Head Screw	1 x 12mm Hose @ 39.4" long	1 x Z14 K Filter
3 x 8mm Tek Screw	1 x 38mm Hose @ 3.2" long	10 x 7" Cable Tie
FOR VEHICLES WITHOUT TOWBAR:	1 x 32mm Hose @ 4" long	5 x 11" Cable Tie
2 x M12 x 30mm Bolt	8 x 1/4" Hose Clamp	Magnet (for use in new tank)
2 x M12 x 30mm Bolt w/11.8" straps welded on	8 x 1/2" Hose Clamp	
8 x M12 Flat Washer	4 x 1-1/2" Hose Clamp	
4 x M12 Nyloc Nut		
BRASS	**ELECTRICAL**	
1 x P6 1/4" x 1/4" Elbow	1 x 3mm Twin Core Wire @ 236" long	
2 x P6 5/16" x 1/4" Elbow	3 x Red Insulated Terminals	
4 x P6 1/2" x 1/4" Elbow	3 x Red Eye Terminals	
1 x P6 1/4" x 1/8" Elbow	2 x Red Male Terminals	
	1 x 0-90 Ohm Sender Unit w/19.7" ground wire	
	1 x LRA PG-210 Switch/Gauge	
	4 x 3mm Heat Shrink Tube @ 1" long	

NOTE: If a replacement fuel filler cap is needed, they are available at AutoZone (Duralast, p/n 6817A)

E. TOOLS NEEDED

1. Safety Items
    a) Safety Glasses
    b) Hearing Protection
    c) Gloves
2. Ratchet Wrench
    a) Metric Socket Set
    b) Socket Extensions
3. Drill
    a) Metric Drill Bit Set
    b) Uni-Bit (stepped drill bit)
4. Catch Pan/Spill Mats
5. Vehicle Owner's Manual
6. Mallet
7. Hydraulic Jack
8. Flat Screwdriver
9. Digital Multimeter
10. Fuel Rated Thread Sealer
11. Circuit Test Light

II. SWITCH/GAUGE UNIT INSTALLATION & WIRING

A. INSTALLATION

1. Select a suitable location in the dash to mount the switch/gauge unit., we recommend using one of the switch blanks.
2. Create an appropriate hole in your preferred location (make sure there is enough room in the dash for the gauge/switch and wiring). Use a Uni-Bit stepped drill bit to drill a 20mm (.78”) hole. Be very careful to not over drill the hole—slightly small is OK, it can be adjusted using a small file to widen the hole as needed. The switch is fairly sensitive to installation, the hole diameter needs to be just the right size (20mm, or .78”). If the hole is too small, and the switch is forced into place, the switch is likely to be damaged or not function properly. You will need to carefully test-fit and remove more material if needed. DO NOT FORCE SWITCH INTO PLACE WHILE TEST-FITTING!
3. Connections should be soldered and heat shrunk, **not just crimped**.
4. Double-check all connections when done.

B. WIRING

1. Find a 12 volt ignition power source (check this with test light). Carry out wiring as per the wiring diagram on this page.
2. Run the 3mm twin core cable to the outside rear of the vehicle. Leave enough wire to reach the sending unit.

PLEASE REFER TO OPERATING INSTRUCTIONS FOR THIS UNIT ON PAGES 12 & 14

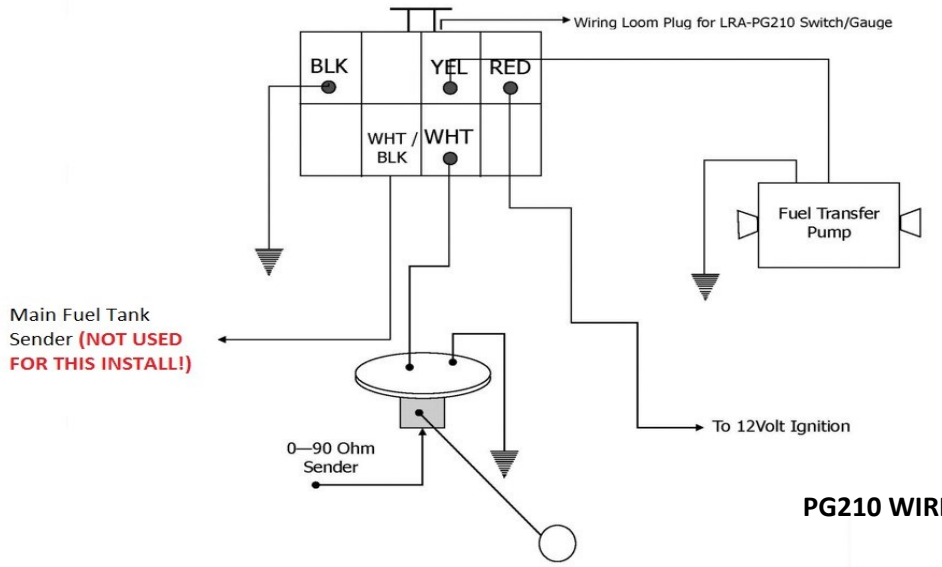

PG210 WIRING DIAGRAM

III. FILLER & TANK PREPARATION

A. PREPARE AND INSTALL THE NEW FILLER

1. Remove the driver-side rear wheel and the plastic filler pipe cover.
2. Remove the OEM fill pipe and cut both pipes at points shown in drawing (included in tank kit).
3. File off sharp edges, install 4-inch length of 32mm hose to lower section of fill pipe (NOTE: OEM filler pipe is 35mm OD, so warming up hose and oiling pipe is advised to assist in fitting hose). Also install 25.6-inch length of 12mm hose to the lower section of steel tube, then refit lower section of filler pipe to vehicle.
4. Install brass fittings to sockets on new twin filler as shown in the diagram (included in tank kit).
5. New twin filler can now be installed to vehicle and secured with the same M8 nut that secured the original filler. Install 3.2-inch length of 38mm hose to the twin filler neck and slide up neck as far as comfortably possible. Don't clamp hose yet, this simply puts hose in good position to make tank installation easier.

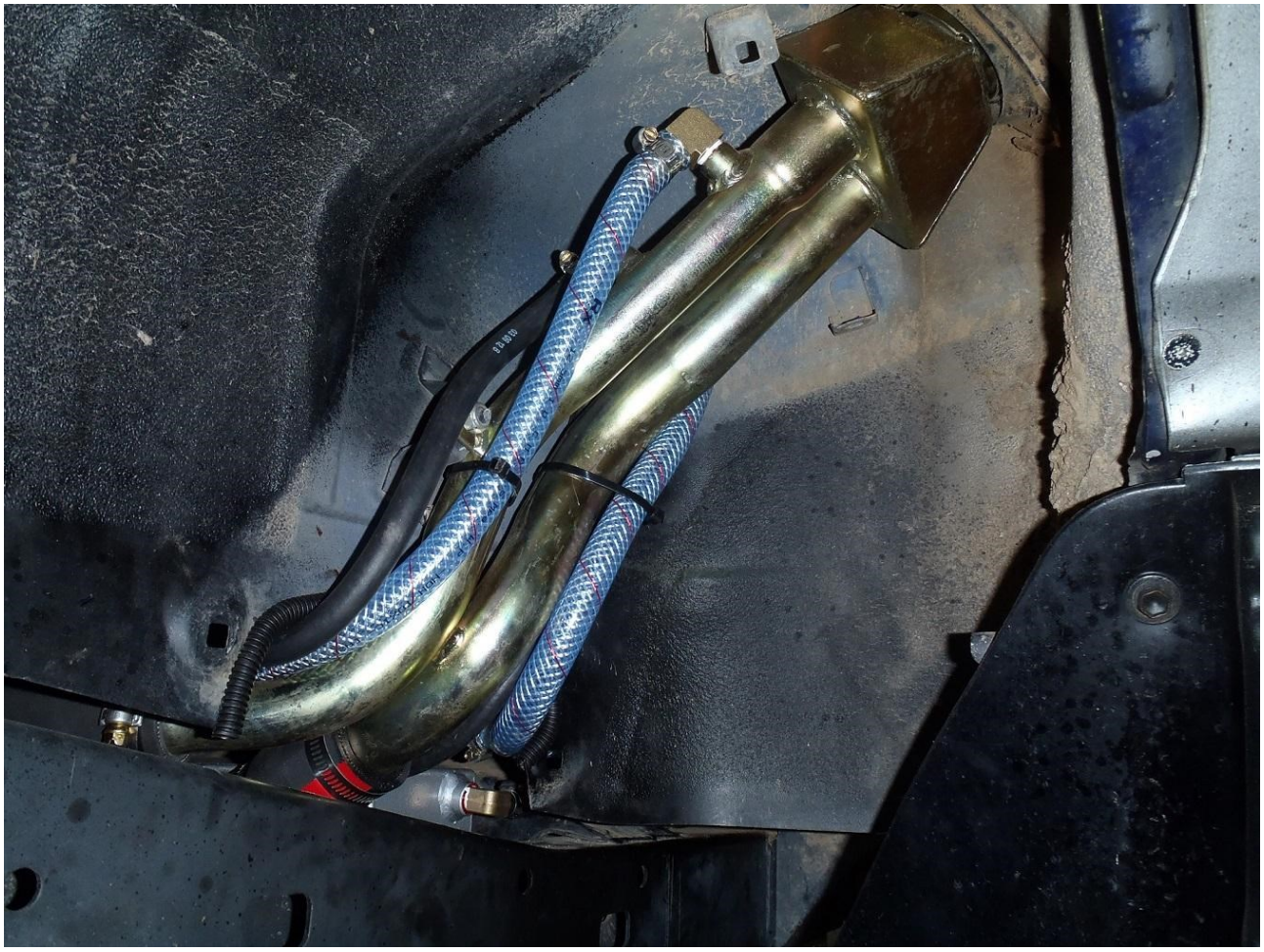

6. If a towbar is fitted to the vehicle, remove bar. If towbar is a genuine Toyota bar, locate and remove 6mm spacer plates from the mounting surface of the towbar (these plates are only tack-welded on in two places, these welds can be easily ground off and any lumps ground flat).

B. PREPARE THE AUXILIARY TANK

1. Install brass fittings to sockets on new fuel tank as shown in drawing (included in tank kit).
2. Drop the supplied magnet into the tank, as close to the fuel pick up point as possible.
3. Install vent hose, fuel pick up hose, fast fill hose and Y-piece to tank. 1/4" vent line connects to the auxiliary vent P6 1/4 x 1/4 elbow on the twin filler. The outlet of the "Y" connects to the P6 1/2 x 1/4 elbow Auxiliary Fast Fill on the Twin Filler. NOTE: DO NOT CONNECT FAST FILL HOSE FROM Y-PIECE TO REAR HALF OF TANK UNTIL TANK IS IN PLACE—THIS HOSE RUNS OVER CROSS MEMBER.
4. Check gauge sending unit Ohm readings at full and empty by rolling tank. Empty should be 0.2 - 2.5 Ohms, Full should be 88 - 92 Ohms.

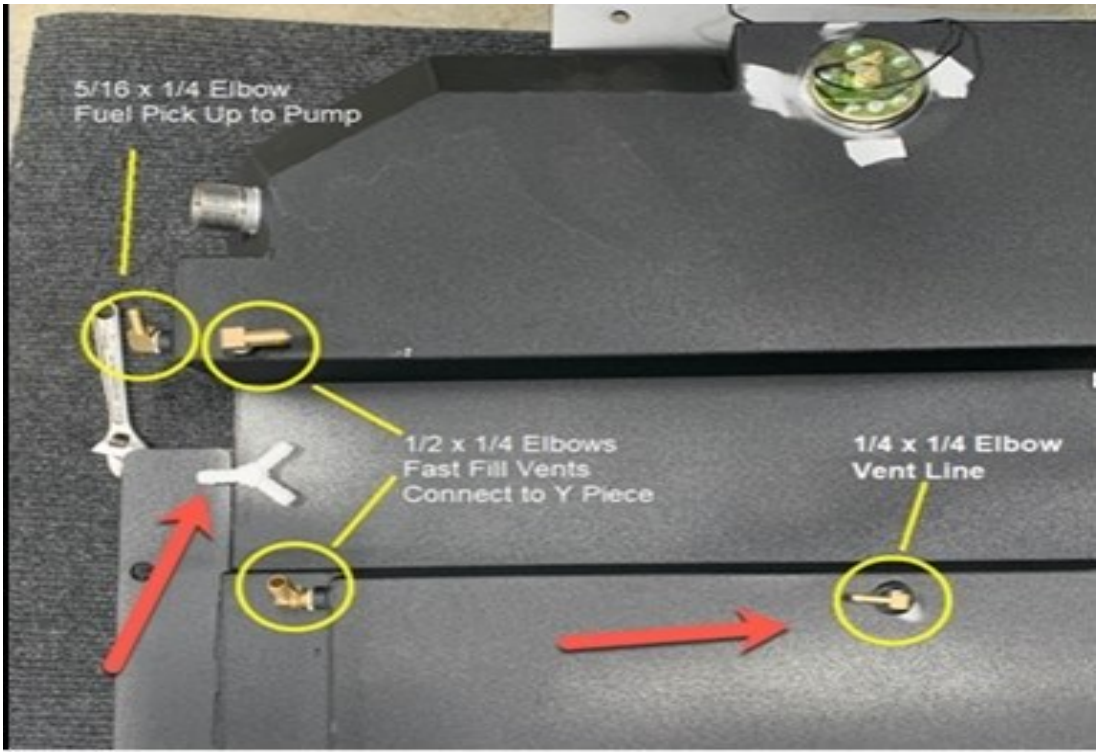

C. INSTALL THE FUEL TRANSFER PUMP

1. Mount the fuel transfer pump in the left-hand rear corner of the vehicle (directly to the floor pan behind the left-hand rear wheel arch is a well-protected area). **THE PUMP MUST BE INSTALLED ABOVE THE FUEL LEVEL OF THE NEW TANK, AND WITHIN 12 VERTICAL INCHES OF THE NEW TANK BOTTOM. THE FUEL PUMP SHOULD BE MOUNTED WITH THE OUTLET HORIZONTAL OR ABOVE THE INLET. THIS WILL HELP TO PREVENT LOCATION-RELATED GRAVITY FEED, CHECK ENGINE LIGHTS (CELs), AND VAPOR LOCK ISSUES.**
2. Run twin core wire from switch/gauge to this area and complete wiring. **DO NOT** ground the pump to the mounting bracket, instead, drill a hole in the body and clear an area for the body ground terminal to be firmly connected to bare metal. The transfer pump is sensitive to power interruption when on and a good ground is **imperative**.

IV. TANK INSTALLATION

A. JACK TANK INTO POSITION/CONNECT HOSES AND SECURE TANK

1. Safely jack the tank into position, slide fill hose down onto tank fill neck as tank goes into position and centralize tank between chassis rails.
2. If no towbar was fitted to the vehicle, mark and drill holes in the chassis rails, using the tank brackets as templates. Secure with bolts provided. If a towbar was fitted to the vehicle, refit towbar with tank and secure with original towbar bolts.
3. Drill mounting holes in front cross member and install bolts.
4. Connect all remaining hoses and wires, taking care not to kink fast fill hoses.

B. FINISH INSTALL

2. Check all clearances and neatly cable tie all hoses and wiring away from any moving parts or heat sources.
3. Refit plastic filler pipe cover and left-hand rear wheel.
4. Reconnect vehicle battery.
5. To test, fill main tank half-full, and the auxiliary tank full, check for leaks. Test transfer pump operation and make sure the gauge is working properly, the level lights are correct and listen for undue noise (a “tic-tock” noise is normal when the pump is running).
6. Check again for leaks.

V. FINAL INSTALLATION CHECKLIST

A. Are all hose clamps tight and secure?

B. Are all nuts and bolts secured?

C. Are mounting brackets and straps secure?

D. Are Fuel Gauge Sending Unit bolts secured?

E. Are all fuel lines secure with no kinks?

F. Does tank interfere with, or rub on, other vehicle components?

G. Is tank calibration accurate?

☐ **Congratulations! You have completed the install!**

TANK USER GUIDE

WELCOME

And congratulations on the purchase of your new tank from Long Range Automotive of Melbourne, Australia. Properly installed and maintained, the tank is easy to operate and will provide you with years of service.

As North American agent, Long Range America is here to help along the way. Your first stop with questions about tank, installation and use is this guide, followed by a call to your installer and if need be, a visit to our website for more help.

Your kit is covered by a three-year limited warranty you can see on our website here https://longrangeamerica.com/tank-warranty-registration/tank-limited-warranty/ and we strongly encourage you to register your purchase with us at this link https://longrangeamerica.com/tank-warranty-registration/

Why register? We want you to have a flawless experience, but sometimes things happen (we need to make repairs, replacements, etc.). Registration is our way of keeping track of our tanks after they leave the warehouse.

We need to collect this information within thirty days of kit purchase – whether direct sale from LRAM or through one of our authorized dealers. In addition, we occasionally make improvements to our in-service products and there may even be recalls. For these reasons, we need this information. Please help us serve and support you!

OPERATIONS

New Configuration:

Your new tank installation included addition of a dual fill fuel point that serves both original tank and your added 29-gallon auxiliary tank. Both tanks are filled through the same filler door.

Adding Fuel:

When filling, the left inlet is for the main tank, the right inlet is for the auxiliary tank . You can fill any or all of either tank in the sequence of your choice.

While filling, the operator must be sensitive to venting of the tank(s) as fuel is added. You may need to pause briefly and then adjust the flow rate as the dual tank fill/vent system accommodates newly added fuel.

If the pump fill control will not allow a “high speed” fill at this point, do not worry, it is just the tank venting that excess air. Fill at the allowed rate until the tank is full (patience is a virtue) and DO NOT ATTEMPT TO TOP OFF THE TANK.

While Driving:

Your engine will draw fuel from the main tank and that gauge will operate normally. As you consume fuel, the gauge will go down and, at some point, you will need to transfer fuel from the auxiliary tank. When you do that is up to you...please keep in mind that, due to the low amperage draw of the fuel transfer pump, the pump moves fuel at a relatively slow rate. This rate may not keep up with the vehicle’s fuel consumption, depending on driving conditions. Transferring fuel early will insure that an adequate volume of fuel is transferred, to keep the main tank from running empty.

Auxiliary Tank Fuel Monitor:

Your installation included the addition of a combination control module as seen here.

There are a series of LEDs that combine to display the contents of the auxiliary tank as follows:

1. The RED and GREEN lights display the contents of the auxiliary tank.
2. All GREEN shows FULL as shown at right. As fuel is transferred, the LEDs will go dark from top to bottom, indicating ¾ tank, ½ tank, ¼ tank of fuel remaining.
3. When all of the fuel has been transferred, the RED flashing light will indicate the tank's status as EMPTY.

Auxiliary Tank Fuel Transfer:

1. When it is time to transfer fuel, simply press the button at the left side of the module to activate the transfer pump.
2. The transfer tank is self-priming and will make a clicking sound until it fills with fuel and begins pumping. That sound will reduce somewhat when fuel is flowing.
3. When the switch is turned ON and the ORANGE light is displayed this indicates that fuel is being transferred.
4. Fuel is transferred at around **2 quarts per minute**.
5. Fuel will be transferred from the auxiliary tank into the main tank until the auxiliary gauge shows a RED flashing light at which point the pump will continue to run for 2 minutes and then the buzzer will sound, and the pump will automatically shut off.
6. You can restart the pump by simply pushing the switch button again, the pump will run again for another 2 minutes before automatically shutting off.
7. If you happen to overfill the main tank, it will simply drain back down to the auxiliary tank, as the transfer line directs fuel into the main tank fill tube downstream from the fuel filler.

QUESTIONS & SUPPORT

Frequently Asked Questions:

- **Will I fill the tank in the same way as before?** See instructions on page 11.
- **Will the Distance to Empty (DTE) Function work as before?** If present, your computer will accurately report on fuel range based upon fuel level in the main tank only.
- **Who do I call with questions, or for assistance?** Your first contact should be to the installer. If you are the installer, or if the installer cannot answer your question, please contact Long Range America in any of the following ways – **our business hours are 8am to 5pm (Pacific Time) Monday to Friday.**
  - Website via https://longrangeamerica.com/support/ (see below)
  - Email via service@longrangeamerica.com
  - Phone via 1-800-224-7801

And let us know how we can better serve you!

Best regards,

LONG RANGE AMERICA

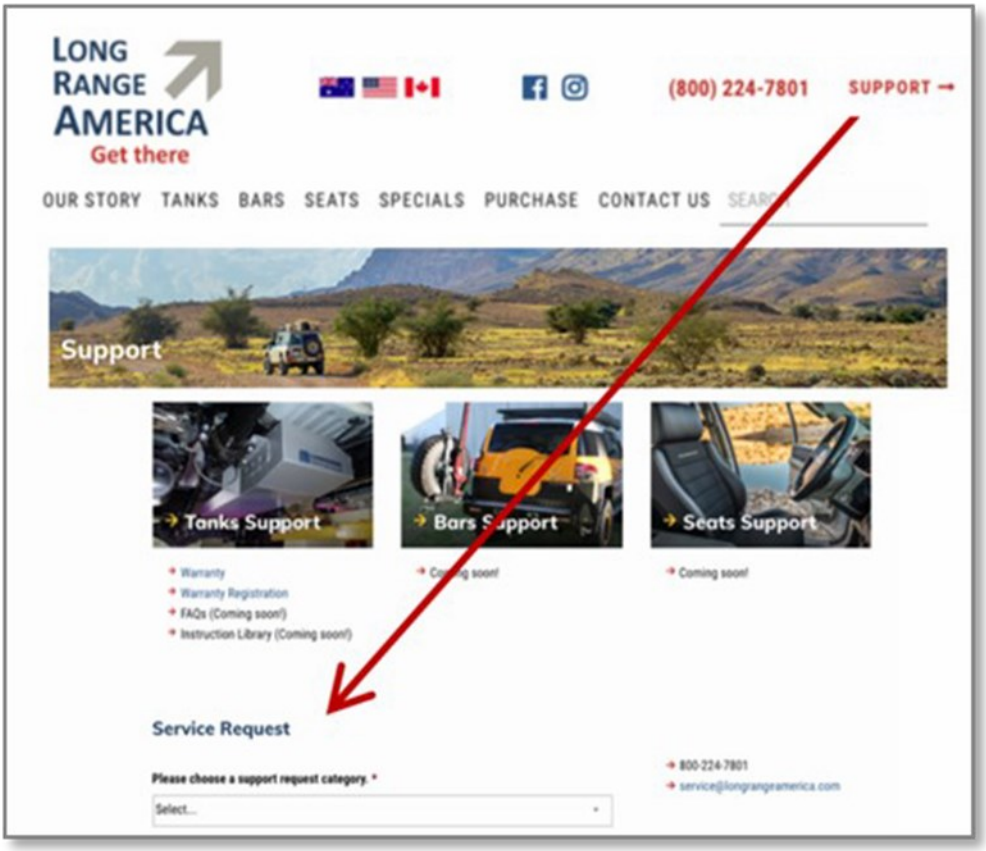

APPENDIX—APEXUS PG210 SETUP GUIDE

We have attached a copy of the Apexus PG210 Gauge/Switch Setup Guide, for additional information...when viewing this guide, open the file attached to the guide to view the information.